R2E180-AS77-05

AC centrifugal fan

backward curved, single inlet

Nominal data

Type	**R2E180-AS77-05**
Motor	**M2E068-BF**

Phase		1~	1~
Nominal voltage	VAC	230	230
Frequency	Hz	50	60
Type of data definition		fa	fa
Valid for approval / standard		CE	CE
Speed	min^{-1}	2300	2300
Power input	W	82	100
Current draw	A	0.36	0.45
Motor capacitor	µF	2	2
Capacitor voltage	VDB	450	450
Min. back pressure	Pa	5	0
Max. ambient temperature	°C	40	35

ml = max. load · me = max. efficiency · fa = running at free air · cs = customer specs · cu = customer unit
Subject to alterations

R2E180-AS77-05

AC centrifugal fan

backward curved, single inlet

Technical features

Mass	1.37 kg
Size	180 mm
Surface of rotor	Coated in black
Material of impeller	PA plastic, black
Number of blades	16
Direction of rotation	Clockwise, seen on rotor
Type of protection	IP 44; Depending on installation and position as per EN 60034-5
Insulation class	"B"
Humidity class	F1-2
Max. permissible ambient motor temp. (transp./ storage)	+ 80 °C
Min. permissible ambient motor temp. (transp./storage)	- 40 °C
Mounting position	Shaft horizontal or rotor on bottom; rotor on top on request
Condensate discharge holes	Rotor-side
Operation mode	S1
Motor bearing	Ball bearing
Touch current acc. IEC 60990 (measuring network Fig. 4, TN system)	< 0.75 mA
Motor protection	Thermal overload protector (TOP) wired internally
Cable exit	Variable
Protection class	I (if protective earth is connected by customer)
Product conforming to standard	EN 60335-1; CE
Approval	CCC; GOST

R2E180-AS77-05

AC centrifugal fan

backward curved, single inlet

Product drawing

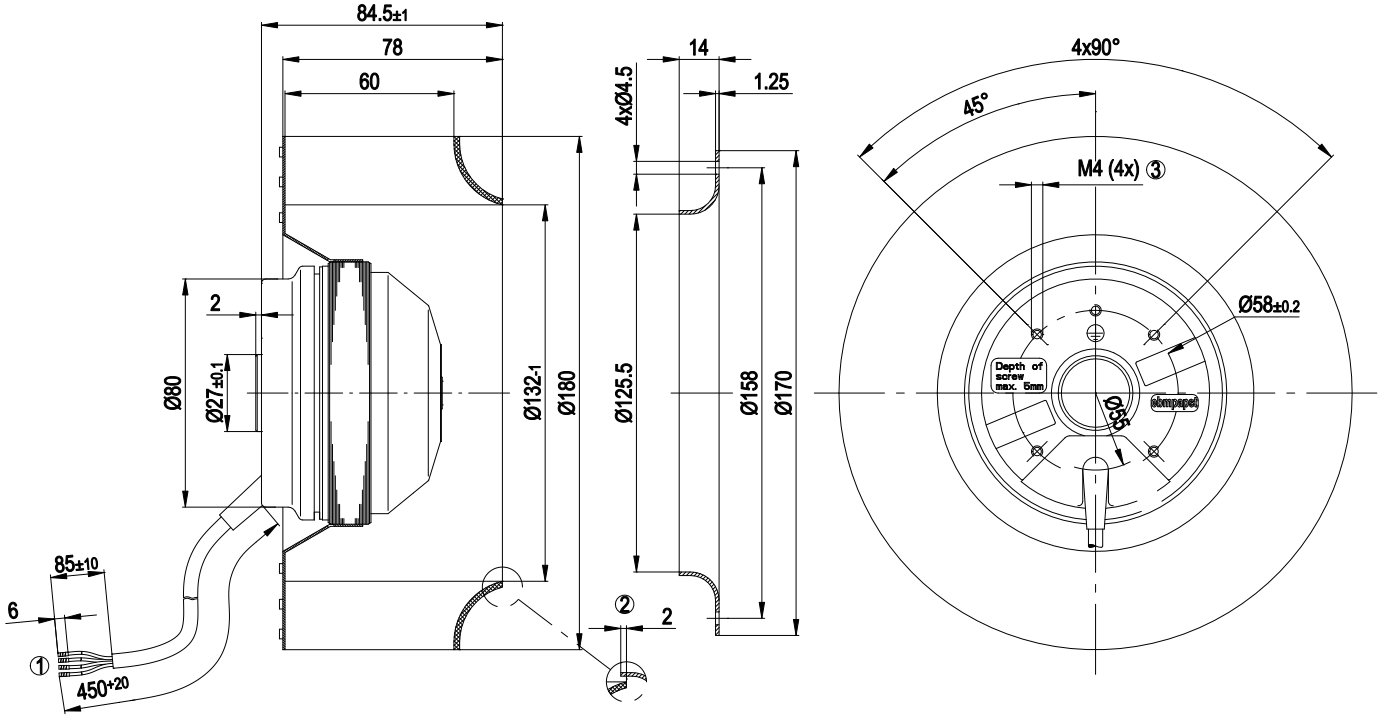

1	Connection line PVC 4 x 0.5 mm²; 4 x brass lead tips crimped
2	Accessory part: Inlet nozzle 09576-2-4013, not included in the standard scope of delivery
3	Depth of screw max. 5 mm

Connection screen

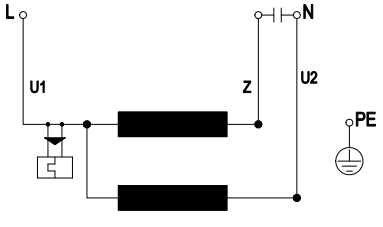

U1	blue	Z	brown	U2	black
PE	green/yellow				

R2E180-AS77-05

AC centrifugal fan

backward curved, single inlet

Charts: Air flow 50 Hz

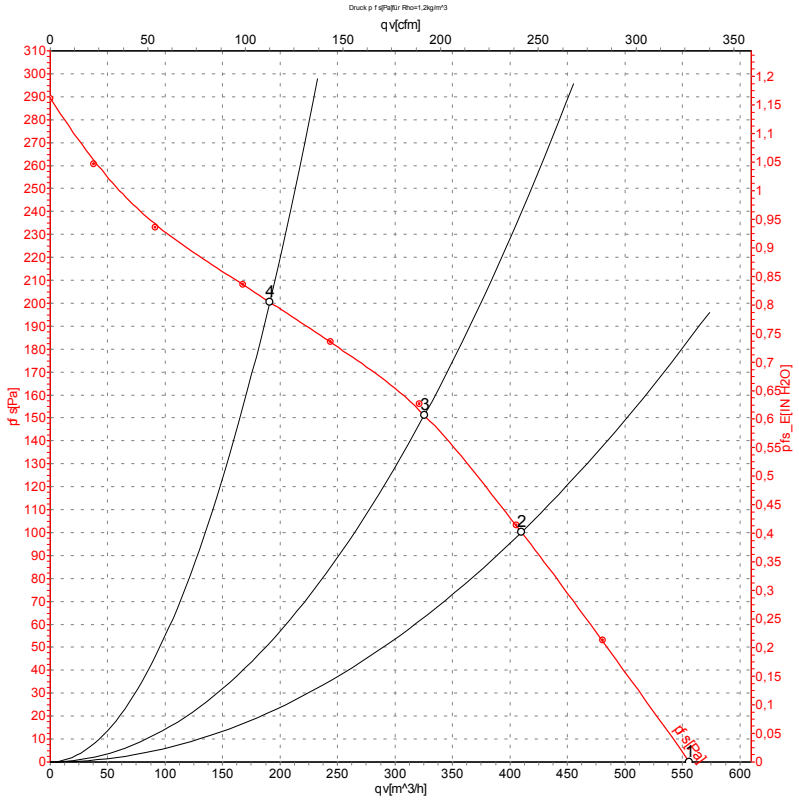

Measurement: LU-20835

Air performance measured as per ISO 5801 Installation category A. For detailed information on the measuring set-up, please contact ebm-papst. Suction-side noise levels: LwA measured as per ISO 13347 / LpA measured with 1m distance to fan axis. The values given are valid under the measuring conditions mentioned above and may vary according to the actual installation situation. With any deviation from the standard set-up, the specific values have to be checked and reviewed with the unit installed.

Measured values

	U	f	n	P_e	I	qv	p_{fs}
	V	Hz	min^{-1}	W	A	m^3/h	Pa
1	230	50	2300	82	0.36	555	0
2	230	50	2265	84	0.37	410	100
3	230	50	2315	82	0.36	325	150
4	230	50	2470	76	0.33	190	200

U = Supply voltage · f = Frequency · n = Speed · P_e = Power input · I = Current draw · qv = Air flow · p_{fs} = Pressure increase

R2E180-AS77-05

AC centrifugal fan

backward curved, single inlet

Charts: Air flow 60 Hz

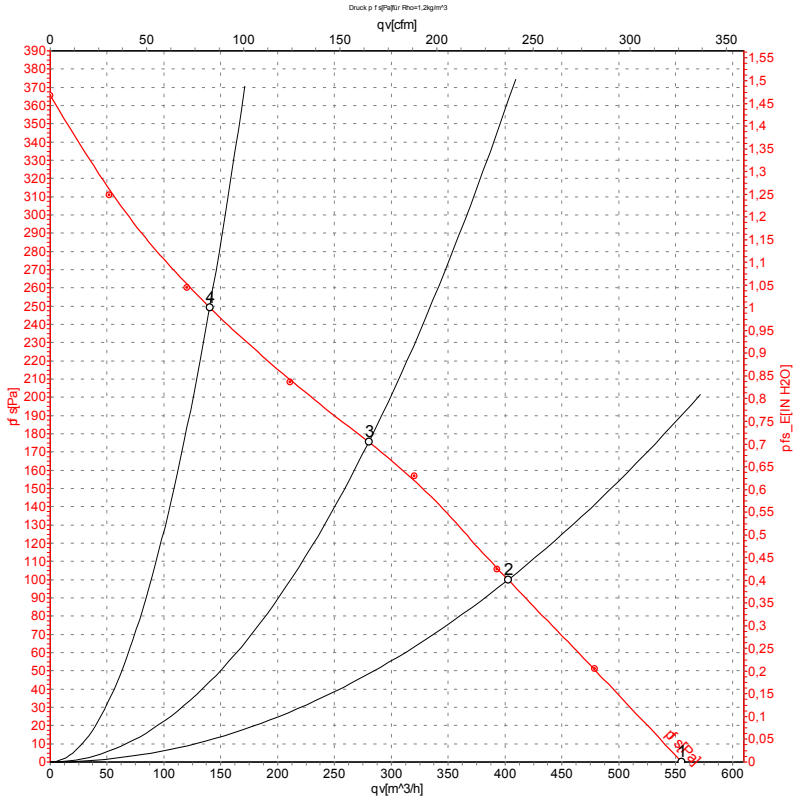

Measurement: LU-20836

Air performance measured as per ISO 5801 Installation category A. For detailed information on the measuring set-up, please contact ebm-papst. Suction-side noise levels: LwA measured as per ISO 13347 / LpA measured with 1m distance to fan axis. The values given are valid under the measuring conditions mentioned above and may vary according to the actual installation situation. With any deviation from the standard set-up, the specific values have to be checked and reviewed with the unit installed.

Measured values

	U	f	n	P_e	I	qv	p_{fs}
	V	Hz	min^{-1}	W	A	m^3/h	Pa
1	230	60	2300	100	0.45	555	0
2	230	60	2240	104	0.45	405	100
3	230	60	2400	101	0.44	280	175
4	230	60	2715	95	0.41	140	250

U = Supply voltage · f = Frequency · n = Speed · P_e = Power input · I = Current draw · qv = Air flow · p_{fs} = Pressure increase